Podest 1-3

to built 3x

(the 2 others can be without the 30x30x2)

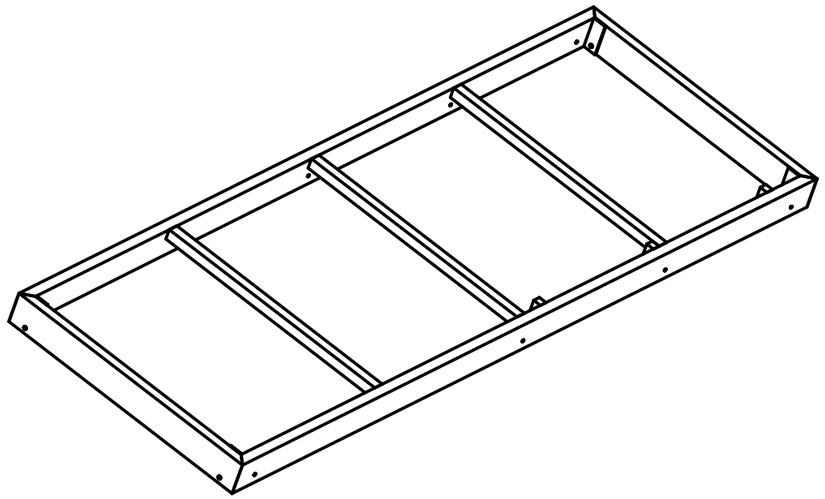

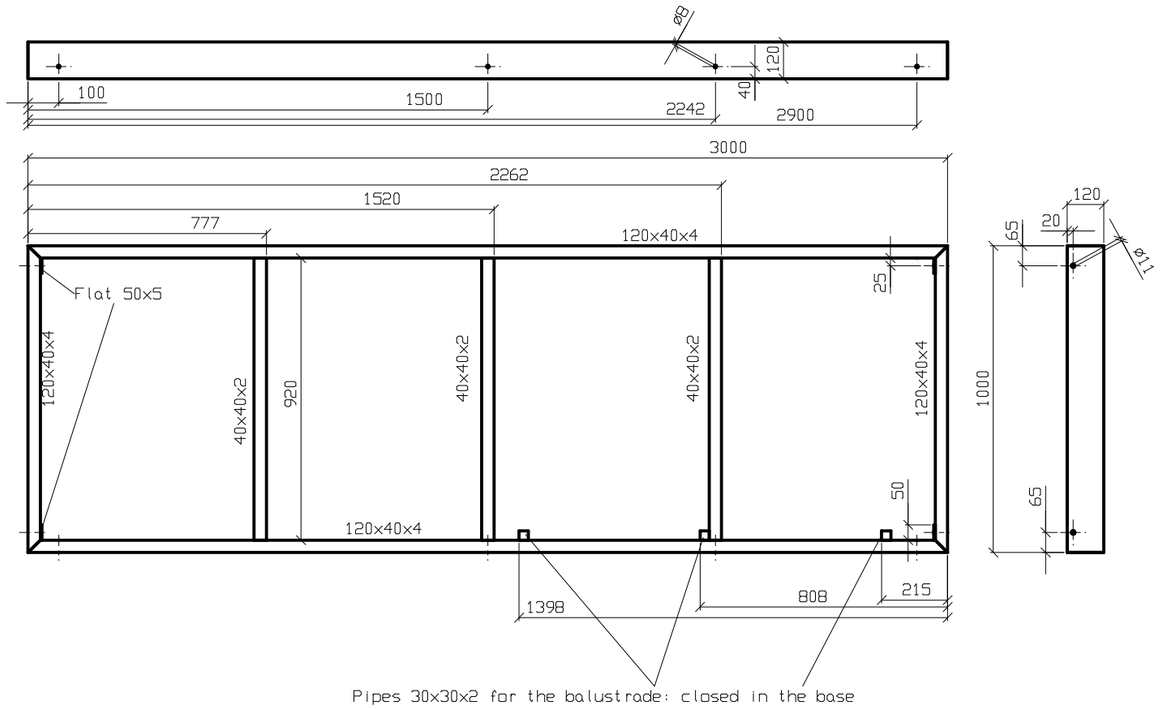

Podest 4

to built 1x

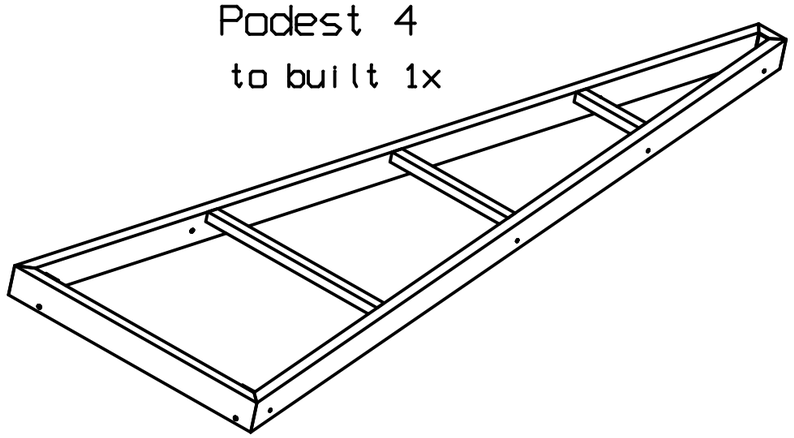

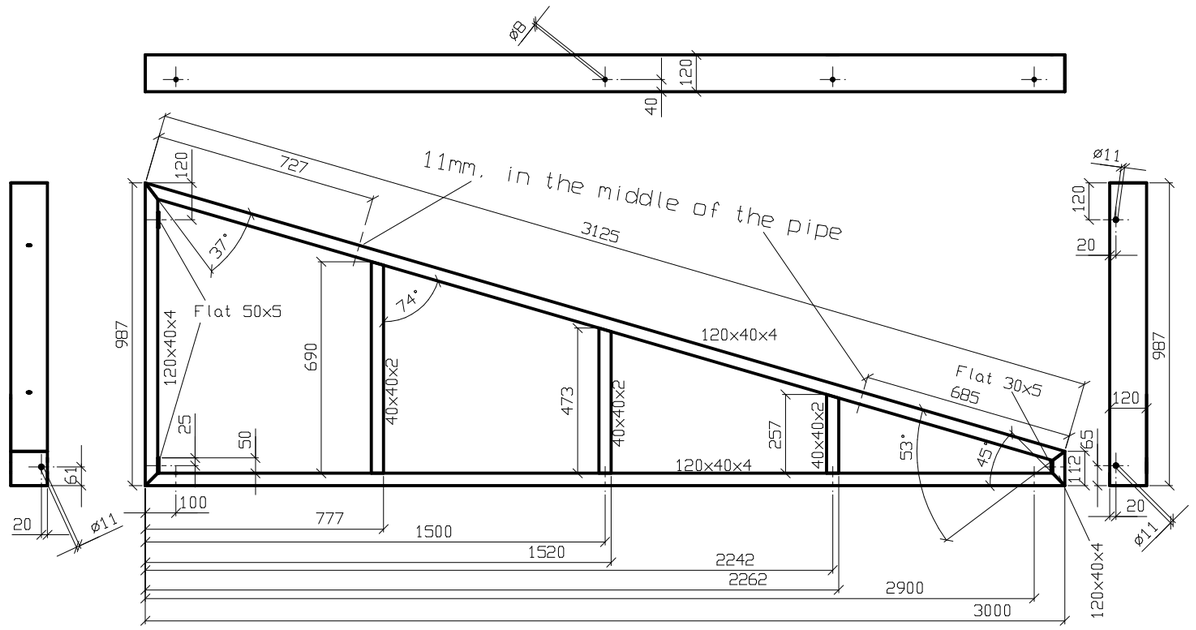

Staatstheater Oldenburg	
WALDLINGE	
Balcony: Podest 1-4	
Aluminium 120x40x4 40x40x2 30x30x2	
Aluminium flat 50x5 30x5	
	M 1:10